LOHMEYER

SMART·WOOD·WORKING

FKS 325 IQ • FKS 350 IQ

Pressure Beam Saw **Sliding Table Saw** CNC – Machining Centre Edgebander

EN

Wood IQ is your smart choice
A good foundation means everything

We are Lohmeyer

We are Tanja and Peter Lohmeyer, Lohmeyer machines' namesakes. As such, we stand for everything that distinguishes our Germany-based company. We comprise decades of brilliant market experience and a bold, uncomplicated approach that is intelligently and directly oriented towards one target: Making your business even more successful.

We achieve this via optimized, standardized Best Practice machines for smart wood working. That is why our company is called Wood IQ.

Our machines

Our smart FKS 3 IQ series sliding table saws combine established quality with unrivalled cost effectiveness. This works because we cleverly combine various components: German engineering experts implement technical industry standards. European service providers ensure the continuous high availability of our products. And, our machines are manufactured with German and Japanese precision tools by the Nanxing company in China. Whether you want to expand your machinery or whether you want to buy replacement machines: Work smart. With Lohmeyer by Wood IQ.

FKS 325 IQ · FKS 350 IQ

The FKS 325 IQ –
Great value at a low price

Easy stacking of the workpiece with the extension of the table to simplify the work

Height adjustable dust extraction hood

Cross cut fence with tilted scales for a maximum length of 3.400 mm • page 12/13

Solid rip fence with fine adjustment up to 1.250 mm • page 10

Solid sliding table 3.000 mm long for a max. cutting length of 2.800 mm • page 8/9

- Electrical height adjustment of the saw blade
- Manual tilting of the saw blade 0-45°
- Max. cutting height 107 mm with a 350 mm saw blade

FKS 325 IQ · FKS 350 IQ

The FKS 350 IQ – something a little more!

Comfortable eye level controller terminal

Extended table for easy removal of the workpiece

Dust extraction hood height adjustable

Cross cut fence with tilted scales for a max. length of 3.200 mm • page 12/13

Electric moveable rip fence up to 1.250 mm • page 10

Sliding table with a length of 3.200 mm for precise ripping up to 3.000 mm • page 8/9

- Electrical height adjustment of the saw blade
- Electrical tilting of the saw blade 0-45°
- Max. cutting height of 107 mm with a 350 mm saw blade

THE SLIDING TABLE

Elegant & solid: The Sliding Table

✓ FKS 325 IQ ✓ FKS 350 IQ

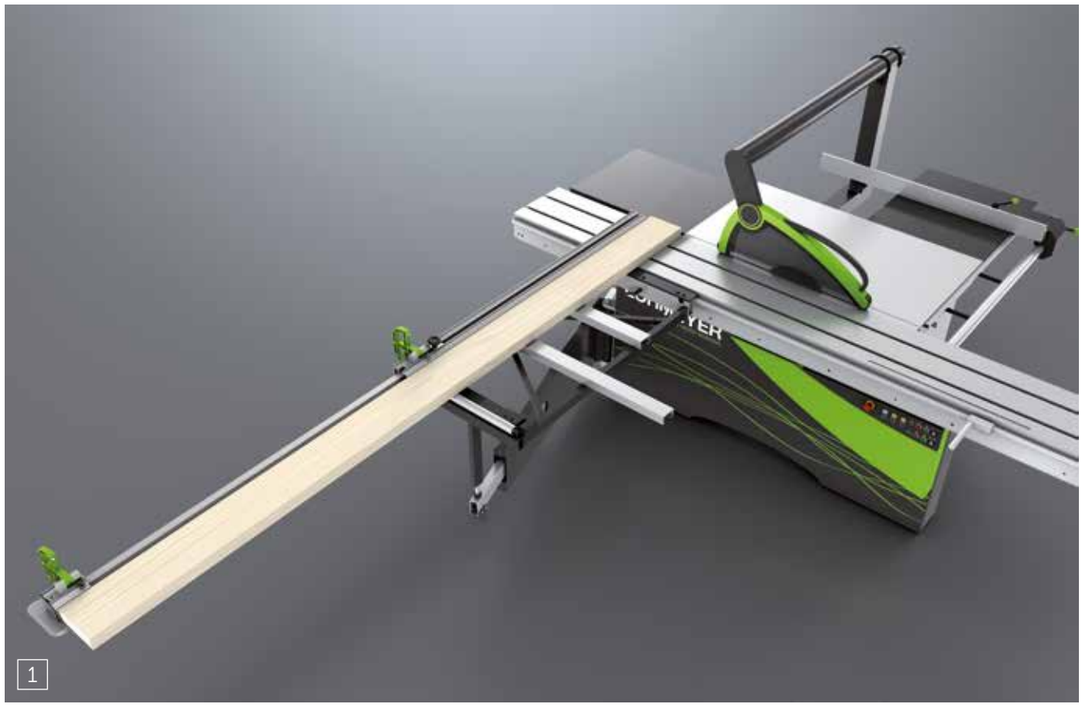

The Sliding Table the heart of the sliding table saw

Precision, availability and long term reliability. These are the preconditions for economic success and reliability with your sliding table saw.

All operations start with the precise rip cut. The table of the FKS 3 IQ Series slides smoothly and exactly – the guides are hardened round bars which carry the sliding table - a robust, proven design for constant satisfaction when operating the FKS 3 IQ Series saws from Lohmeyer. Of course the system is maintenance free.

Quality and Security

As a professional you know the sliding table system guarantees the accuracy of the cross cuts because the sliding table picks up the cross cut fence.

If you are smart you count on quality and precision, engineering which secures constant satisfaction when operating the Lohmeyer FKS 3 IQ Series sliding table saws.

1 The double roller carriage takes on the cross slide. The default page set precisely parallel to the saw blade ensures precise angle cuts over many years.

2 Elegant & solid: The sliding table

3 The large rollers connect the sliding table with the lower table through the case hardened round bars.

The Rip Fence

One Fence, four applications

✓ FKS 325 IQ ■ FKS 350 IQ

Four Wins: The rip fence is easy to move. The rip fence is easily adjusted, swung away, tilted and adjustable in length

• Easy to adjust
Move the fence easily. The hardened and polished round bar makes it possible.

• Tilting
Your workpieces are sometimes slightly larger? No, problem. Simply rotate the fence just below the machine table level.

• Flipping
Narrow parts cut easier and safer with tilted rip ruler. After flipping it is only 10 mm high.

The operators' hands are further away from the blade and when tilting the saw blade there is enough space available.

• Adjustable length
When workpieces are cut from one workpiece with always the same dimensions – just pull the fence ruler back and use the cross cut table. This is convenient, precise and will save a lot of time. The corresponding precision you will get with the fine adjustment devise on the rip fence.

The Cross Cut Fence

✓ FKS 325 IQ ✓ FKS 350 IQ

Inclined scales make it easy to read the measurement. The gap-free folding units are easy to move.

The fence ruler is removable and can be positioned on both sides of the cross table.

Remove the precise cross table is very easy. Even without tools.

The Mitre Fence

✓ FKS 325 IQ ✓ FKS 350 IQ

One sided mitre fence

The mitre fence enables precise cutting of narrow and wide pieces. It is easy to adjust and mounted on the sliding table without tools in a few simple steps. The cross cut fence table can be put underneath the mitre fence to support longer and thinner workpieces.

The Cutting Size

FKS 325 IQ ✓ FKS 350 IQ ✓

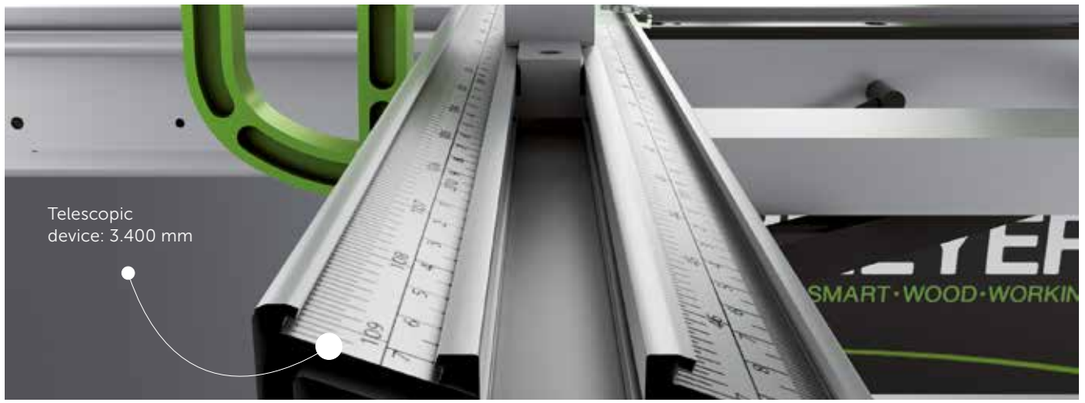

• Cutting length sliding table
Length of the table FKS 325 IQ = 3.000 mm
Corresponding cutting length = 2.800 mm

Length of the table FKS 350 IQ = 3.200 mm
Corresponding cutting length = 3.000 mm
Secure, accurate and guided ripping

• Cutting length of the cross cut fence
1.900 mm while using the lower scale,
3.400 mm while using the top scale.

An adjustable device supports unstable pieces – a roller at the end of the cross cut fence table supports the loading and unloading of the machine.

• Cutting width Rip Fence
Max. width when using the rip fence - 1.250 mm

Space requirement

FKS 325 IQ ✓ FKS 350 IQ

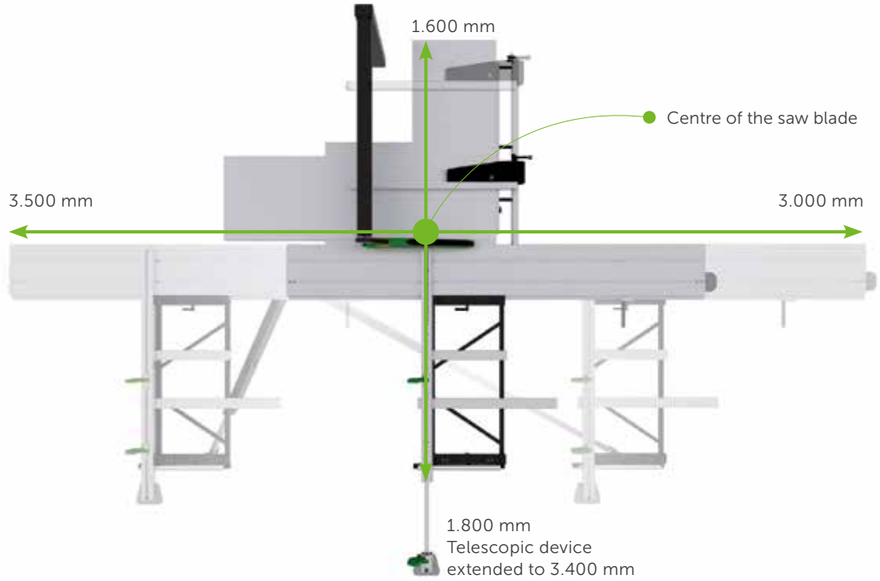

FKS 325 IQ FKS 350 IQ ✓

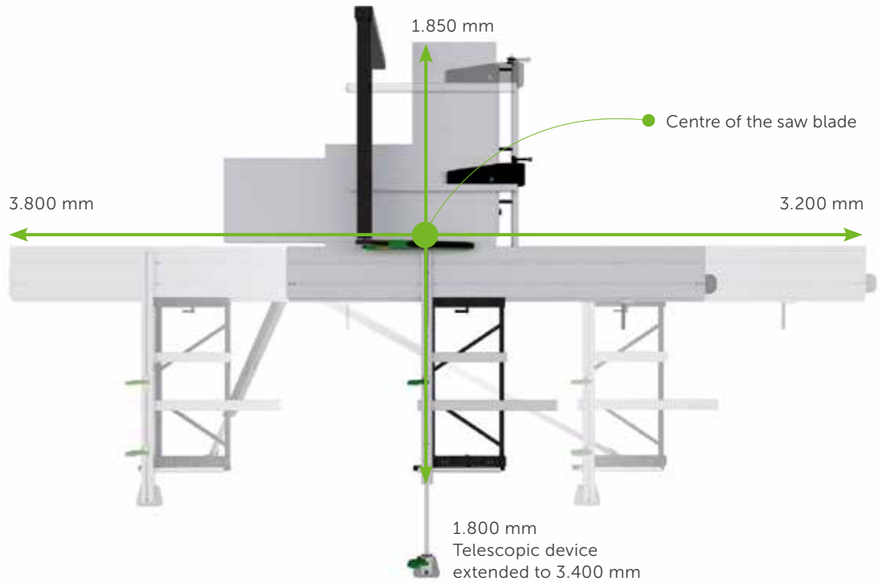

The Saw Aggregate

The Tilting System

✓ FKS 325 IQ ✓ FKS 350 IQ

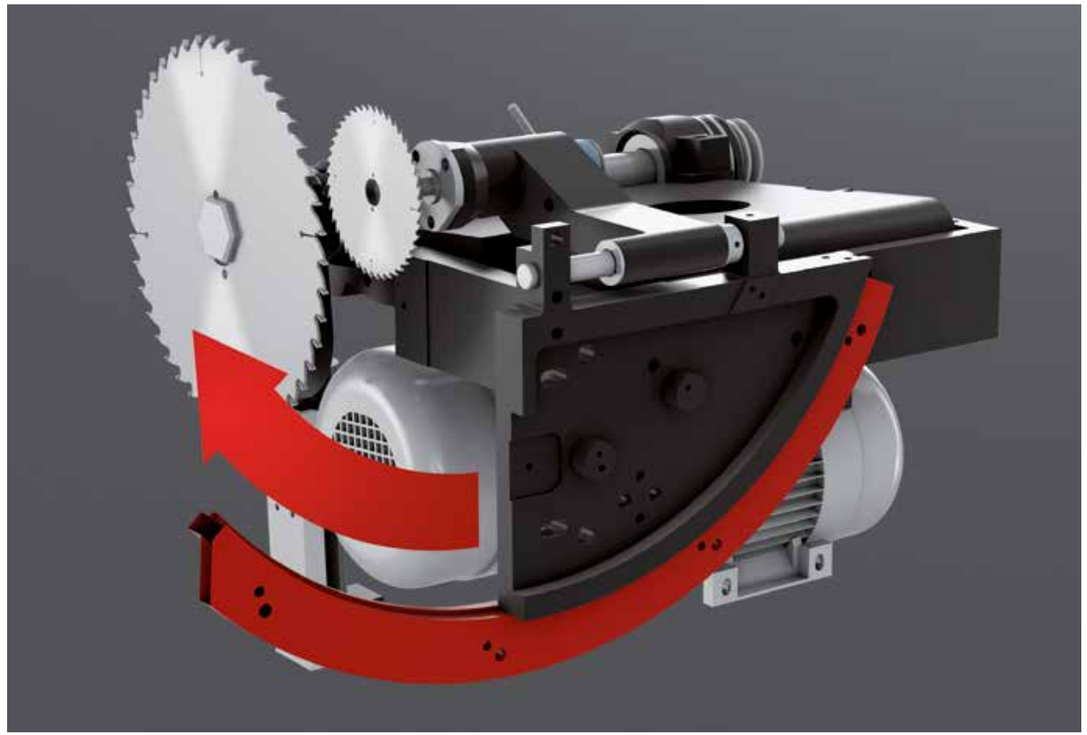

Like the sliding table, the saw aggregate is a major component in the sliding table saw.

The design of the Lohmeyer Sliding Table Saw guarantees operational safety and smooth running. This means for you: Availability each day and the precision you need in the cabinetry for your customers.

Big distances and clean space

The two main ball bearing of the saw shaft ensure the parallelism to the sliding table. The big distance guarantees accordingly leverage. The saw is and will always stay parallel to the sliding table.

There are no guiding systems in the area of the saw – so the moving machine elements will stay clean. The intelligent suspension design of the saw aggregate works through a pivot bearing and an electrical height adjustment. The big leverage secures smooth running of the systems – for many years.

Durable and reliable

The angle device is positioned outside of the pollution source. Durability and reliability are secured with proven German design.

This is smart. Using well tried leverage systems and avoiding expensive material and heavy duty synthetic plastics due to the smart basic conception of the FKS 3 IQ Series.

The Base Frame

✓ FKS 325 IQ ✓ FKS 350 IQ

A solid foundation is the foundation of success. This is particularly true for the core components the sliding table and the saw aggregate. Both units need a solid foundation – the base frame.

Manufactured with high tech laser cutting machines "Made in Germany" it is a closed design and very rigid. This guarantees smooth running and stability.

The Electrical Movable Fence

■ FKS 325 IQ ✓ FKS 350 IQ

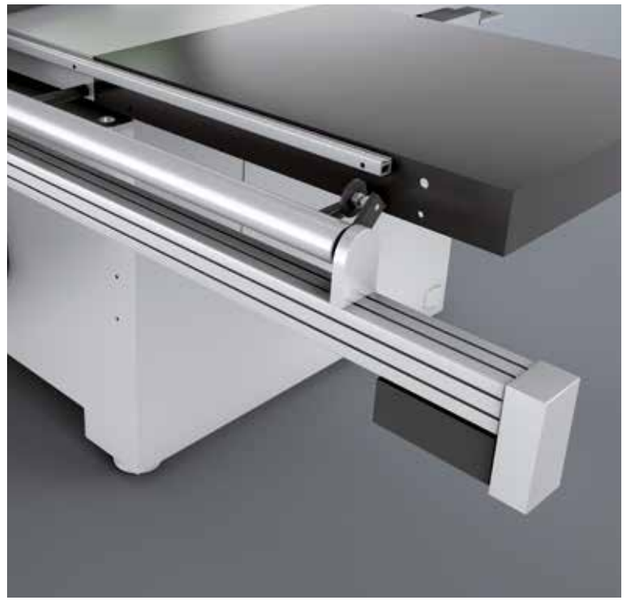

The electrical movable fence has an accuracy of +/- 1/ 10 of a mm. The ball screw spindle positioned in a dust free housing is responsible for this task. Fast and reliable. In the event of any technical issues, the powered function can be deactivated and the fence can be operated manually. The scale build in the machine frame allows a very easy operation.

Below 120 mm the fence stops automatically due to security reasons. After verification the fence continues its positioning – in case of a tilted saw this function prevents a crash with the saw blade.

The Double Sided Mitre Fence

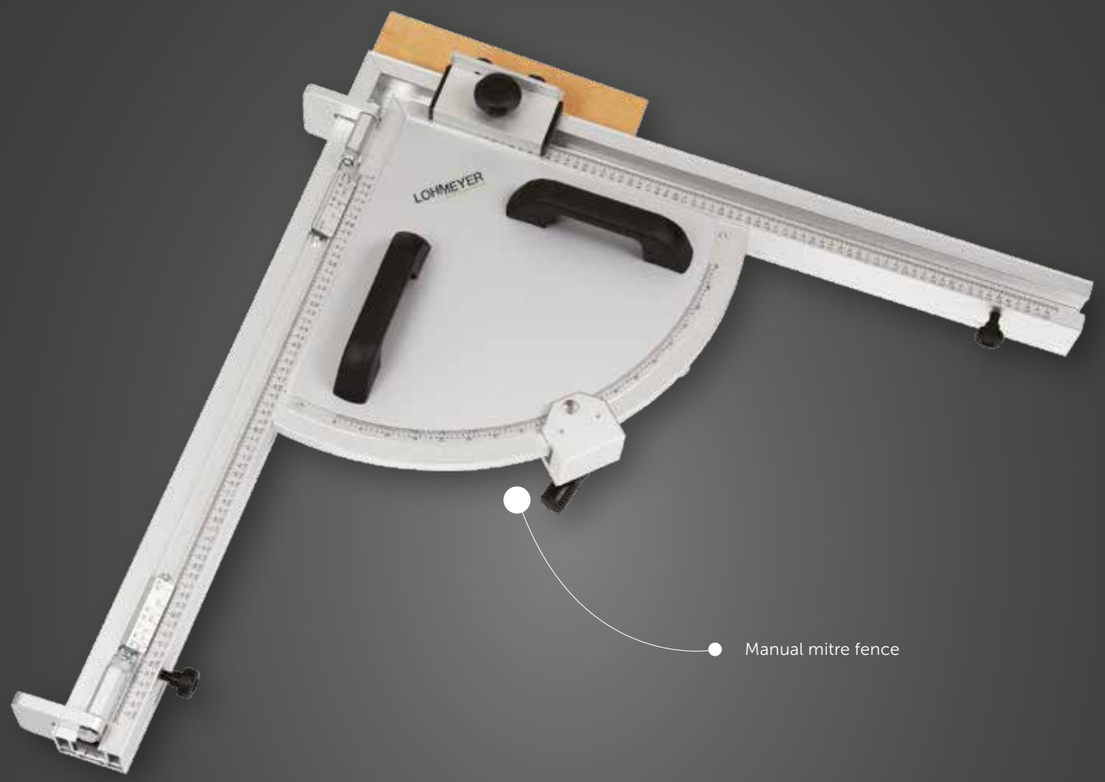

DOUBEL SIDED MITRE FENCE

✓ FKS 325 IQ ✓ FKS 350 IQ

Double sided mitre fence for the FKS 3 IQ Series

The compact design and the light weight of only 12 kg is convincing right away.

The registered design of the splitting wedge makes it easy to cut off market pieces and pretends blow outs. Due to the included wall mounting unit the double sided mitre fence may be parked at the wall.

Safe Repeatability

A scale supports the length and angle postionining. The length of the scale 1.375 mm. The gap free stop system allows repeatability. For often used angles (5°, 10°, 15°, 22,5°, 30°, 45°, 50°, 60°, 67,5°) a length compensation is available.

Exact display variants

The setup of the length- and angleposition is adjusted through the scale and the digital read out. The accuracy of the digital readout is about 0,01°, cor length positioning about 0,1 mm. Four angles including the specific length compensation can be memorized.

The FKS 3 IQ Series
Facts & Figures in a nut shell

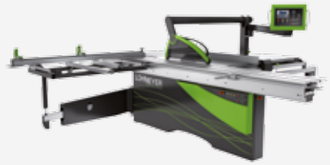

	FKS 325 IQ	FKS 350 IQ
Max. sawblade diameter	350 mm · 107 mm · 45° max. 70 mm	350 mm · 107 mm · 45° max. 70 mm
Max. sawblade diameter	450 mm · without scoring saw	450 mm · without scoring saw
Length sliding table	3.000 mm · 2.800 mm cutting length	3.200 mm · 3.000 mm cutting length
Motor	5,5 kW	5,5 kW
Manual angle adjustment of the saw blade	✓	–
Electrical height adjustment of the sawblade	✓	✓
Eye level controller terminal	–	✓
RPM main saw	5.200 / 3.800 RPM	5.200 / 3.800 RPM
RPM scoring unit	9.000 RPM	10.000 RPM
	Mitre fence to slide on the sliding table	Mitre fence to slide on the sliding table
Cross fence	Up to 3.400 mm	Up to 3.400 mm
Rip fence	Up to 1.250 mm	Up to 1.250 mm • electrical movable • data input through eye level terminal

Wood IQ GmbH
Our Service – just smart

For detailed information on the sliding table saw and other machines for cabinet manufacturing please refer to
www.lohmeyer-iq.com

LOHMEYER
SMART·WOOD·WORKING

LOHMEYER
SMART·WOOD·WORKING

Wood IQ GmbH
Lohmeyer
Goethestraße 14
D-97941 Tauberbischofsheim

Tel.: +49 9341 89568-0
Fax: +49 9341 89568-10

www.lohmeyer-iq.com
info@lohmeyer-iq.com

D-Sign-Grafix GmbH